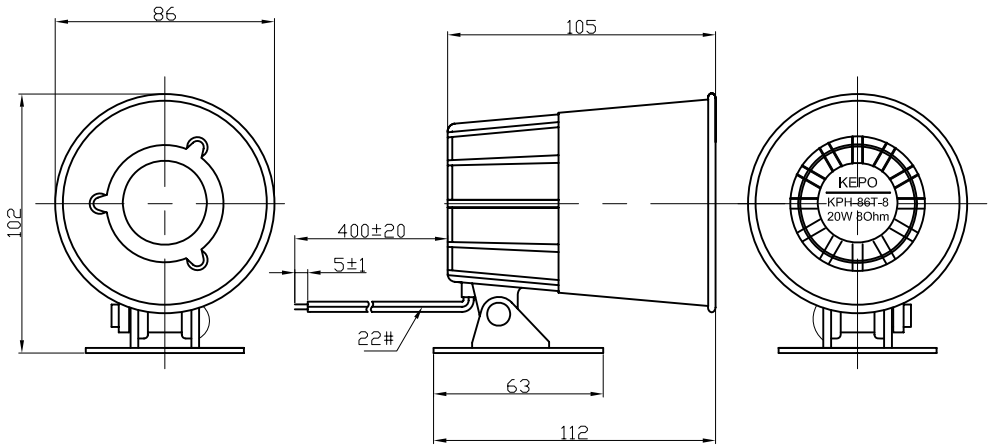

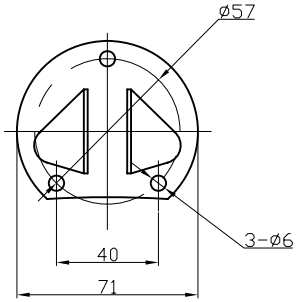

Specification (Test Condition, 25℃)

1. Housing Material/ Color..... ABS / Black
2. Voice Coil Impedance ..... 8 Ohm (at 1 KHz)
3. Voice Coil Dimension ..... Ø 25.4 mm(Dia.)
4. Magnet Size ..... Ø60*32*10 mm(Dia.*dim.*H)
5. Power Rating RMS ..... 15 W
6. Power Rating Peak ..... 20 W
7. Frequency Range 200-10000Hz
8. Resonant Freq. ..... Fo. 1.5 KHz ±10%
9. S.P.L. ..... 102±2dB(at 1 meter, 2.83V,1000Hz)
10. Load Test ..... 8 Hours (at 15W,500-5000Hz)
11. Heat Test ..... 8 Hours (at 60℃)
12. Operating Temperature range ..... -20 ~ +60℃
13. Wires Connection ..... Black ,White(Non-Polarized)
14. Weight ..... 360 ±10 g

No.	DESCRIPTION	APPROVED	DATE

TOLERANCES UNLESS NOTED OTHERWISE
.X ±
.XX ±
.XXX ±
90° FORMED ANGLES +2° -1°

FIRST ANGLE PROJECTION

APPROVALS	DATE
DRAWN	
CHECKED	
APPROVED	06.10.23

KEPO NINGBO KEPO ELECTRONIC CO.,LTD
http://www.chinaacoustic.com

Electronic Horn
KPH-86T-8

UNIT mm | DWG NO. KP3.840.461.01

SCALE NOT TO SCALE | SHEET | VER 1.2